EMECA
SPE USA

The future of pile driving

About us

EMECA/SPE USA manufactures steel piling joints for casting into pre-stressed concrete piles for deep foundations. These joints conform to the requirements of the International Building Code (IBC) and have also received Florida DOT certification for Emeca 18" and 24" splices. Our joints are all manufactured in USA in our automated, state of the art facility located in Laurel, Delaware.

Products

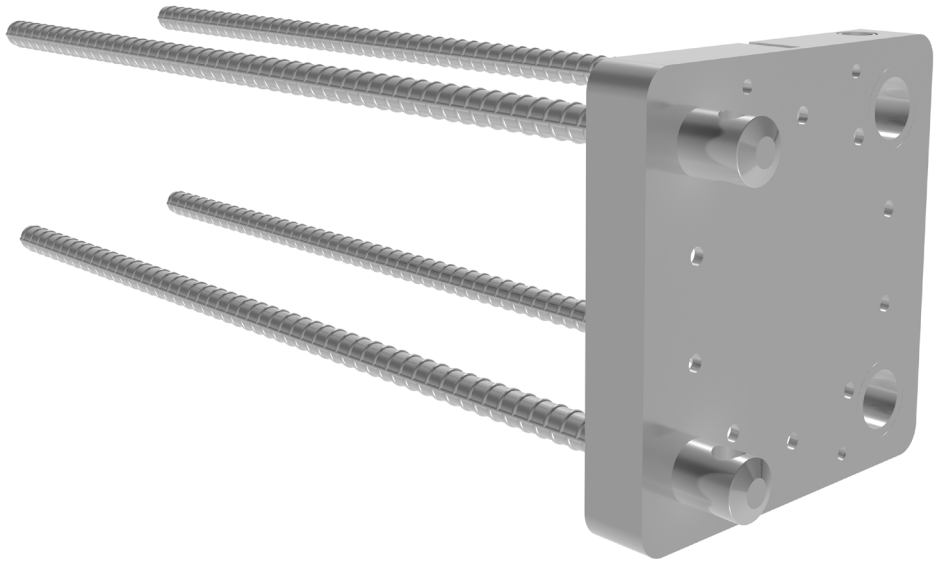

Our most popular splices are 12",14",16",18" and 24" square pile joints made to save you both money and time.

OTHER ACCESSORIES

Our product range includes pile shoes, casting guides, locking pins and other accessories that will suit your concrete pile needs.

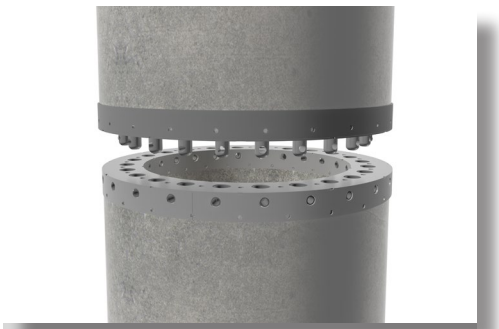

CUSTOM DESIGN

We can also customize our splices to specific size, shape and strength needed to meet required customer regulations.

Tel. 302.875.0760

Casting

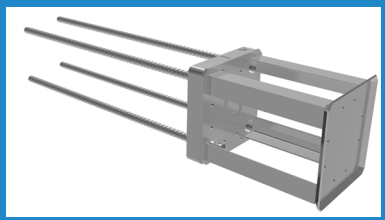

Casting guide is put to place and secured with bolts

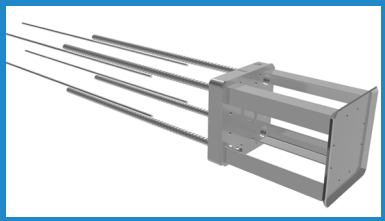

Auxiliary rebars are tied to the splice rebars

The Emeca splice, spirals and strands in casting form

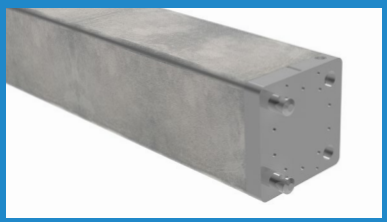

Concrete pile is casted and is ready to install

Emeca splices are proudly made in USA

Installation

Drive plate is removed

Locking mechanism are tapered for fast alignment

4 locking pins are hammered in to draw piles together

Pins permanently lock splices together. Splicing is complete in 3 minutes

Quality

Our joints are strong and reliable. The bending tests conducted by The Citadel and The University of South Carolina confirmed the strength of the Emeca 3-Minute Splice and validated analytical flexural modeling. Our products have also been tested and approved for Florida DOT where we show the following results:

Two 18 inch x 18 inch x 20 foot pile segments were spliced using an Emeca splice connection. After positioning the segments end-to-end with a crane, the splice connection was completed within minutes.
The resulting 40-foot long pile was load tested in four-point bending to determine the flexural capacity of the splice connection. The connection exhibited a ductile load displacement response and an experimental moment capacity of 273 kip-ft. The experimental capacity exceeded the target capacity of 245 kip-ft based on requirements from FDOT Specification 455-7.8 Pre-Planned Splices.

SPLICE TIME JUST 3 MIN

WHY US

Pile splices have been especially useful when facing these challenges on your construction site

- Piles need to be driven longer than a standard truckable load (~55ft)
- Jobsite is a low-overhead site
- When driving battered piles
- Pile handling logistic on the jobsite needs to go smoothly

FAST

New splice is prepared, secured and locked in place in just 3 minutes with Emeca splices

STRONG

Our patented locking mechanisms ensure a reliable connection at the location of the splice. The splice is locked at all corners by steel pins that draw it into pre-compression. Connection is so strong that you can easily and reliably drive even accurate angled battered piles.

COST EFFECTIVE

We can help you to save valuable time and money. Emeca splices could be transported with just one truck, no complicated special transport needed. When working with splices and purpose-build pile driving rigs, you would only need a crew of 2 people: 1 operator and 1 ground person. Smaller crews increase safety but also save money. Also in most areas of the US, concrete is less expensive than steel. Savings on the piling material could save tens of thousands of dollars on each project. The time saved on logistics and not having to weld the piles on-site, can result to significant savings. This is why we strongly believe the Emeca splices are the future of pile driving.

Contact us to find out how we can help you to save money and time. We will help you exchange steel piles to concrete piles with Emeca splices. We'll make it easy for you to use pile joints on your jobsite.

Tel. 302.875.0760 info@emeca-speusa.com www.emeca-speusa.com

TOP PICKS

Tens of thousands of Emeca splices have been successfully installed all over the country. We have been working with hospitals, apartment buildings, national landmarks and even launch pads for rockets re-suppling the international space station. All of these projects needed a reliable foundation and for piling these landmarks, Emeca pile splices were proven to be the best choice.
Here are couple of our jobs we can proudly present.

NASA launch pad

Wallops Island, Virginia

Custom made cylinder splice for a large bridge project

Cartagena, Colombia

Veterans Administrational Hospital

New Orleans, Louisiana

Seaport Canaveral Tank Farm

Cape Canaveral, Florida

TECHNICAL INFO

Each of the two components of the Emeca 3-Minute Splice is comprised of a solid steel base plate designed for a square concrete pile. Two female (socket) and two male (stud) locking mechanisms are welded on opposite sides of each base plate. Locking mechanisms are welded to long pieces of reinforcing bar.
The two pieces of each splice are identical. Eliminating the need for A-B mating makes the Emeca splice remarkably convenient in casting, handling and installation.
In addition to square piles we can customize to specific size, shape and strength needed to meet your needs.

Listed below are the parameters and allowable limits of our most common pile splices.

12" E1 Pile Splice Capacity

Parameter	Allowable limit
Rated Tensile Capacity for Full Splice (4 bars)	129 kips or 32.25 kips/bar
Shear Capacity of the Splice Joint	215 kips
Bending Moment Capacity of the Splice Joint	59.4 k-ft. (at 0 Axial load)
Allowable Driving tensile stress limit	950 psi

14" E3 Pile Splice Capacity

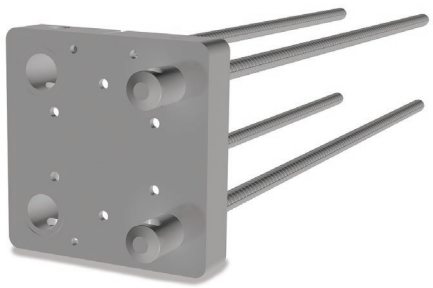

Parameter	Allowable Limit
Rated Tensile Capacity for Full Splice (4 bars)	216 kips or 54 kips/bar
Shear Capacity of the Splice Joint	409 kips
Bending Moment Capacity of the Splice Joint	92 k-ft. (at 0 Axial load)
Allowable Driving tensile stress limit	1151 psi
Recommended Driving Tensile Stress Limit	<1151 psi
Max. Compression While Driving	768 kips

16" E3 Pile Splice Capacity

Parameter	Allowable Limit
Rated Tensile Capacity for Full Splice (4 bars)	216 kips or 54 kips/bar
Shear Capacity of the Splice Joint	409 kips
Bending Moment Capacity of the Splice Joint	113 k-ft. (at 0 Axial load)
Allowable Driving tensile stress limit	954 psi
Recommended Driving Tensile Stress Limit	<954 psi
Max. Compression While Driving	1250 kips

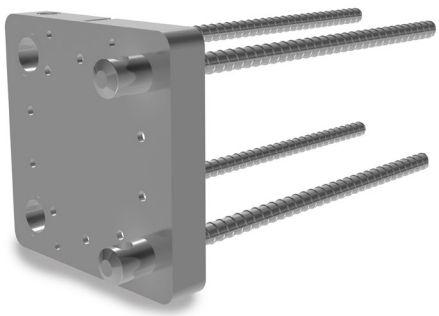

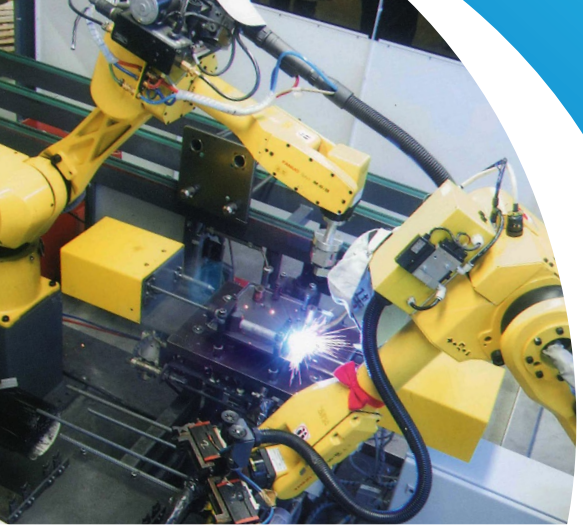

CONTACT US

CALL 302.875.0760
SEND EMAIL INFO@EMECA-SPEUSA.COM
WEBSITE WWW.EMECA-SPEUSA.COM

18" E3 Pile Splice Capacity

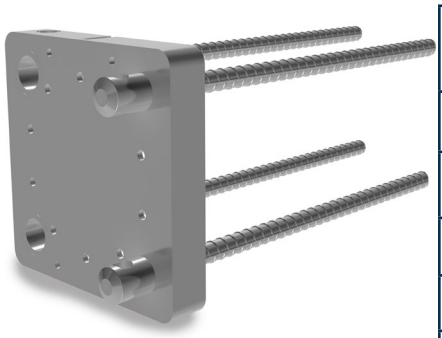

Parameter	Allowable Limit
Rated Tensile Capacity for Full Splice (4 bars)	329 kips or 82.25 kips/ bar
Shear Capacity of the Splice Joint	409 kips
Bending Moment Capacity of the Splice Joint	156 k-ft. (at 0 Axial load)
Allowable Driving tensile stress limit	1248 psi
Recommended Driving Tensile Stress Limit	<1200 psi
Max. Compression While Driving	1560 kips

24" E3 Pile Splice Capacity

Parameter	Allowable Limit
Rated Tensile Capacity for Full Splice (8 bars)	701 kips
Shear Capacity of the Splice Joint	1033 kips
Bending Moment Capacity of the Splice Joint	603 k-ft. (at 0 Axial load)
Allowable Driving tensile stress limit	1290 psi
Recommended Driving Tensile Stress Limit	<1200 psi

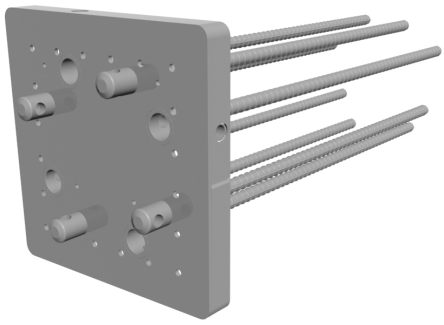

Calculations are based on 6000 psi concrete

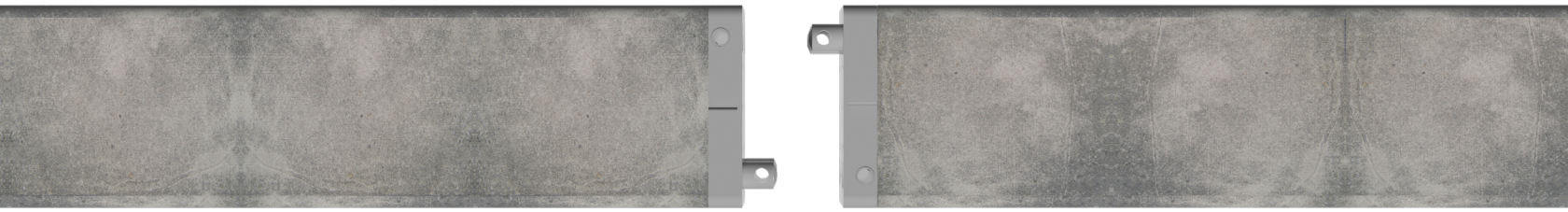

Tel. 302.875.0760 info@emeca-speusa.com www.emeca-speusa.com

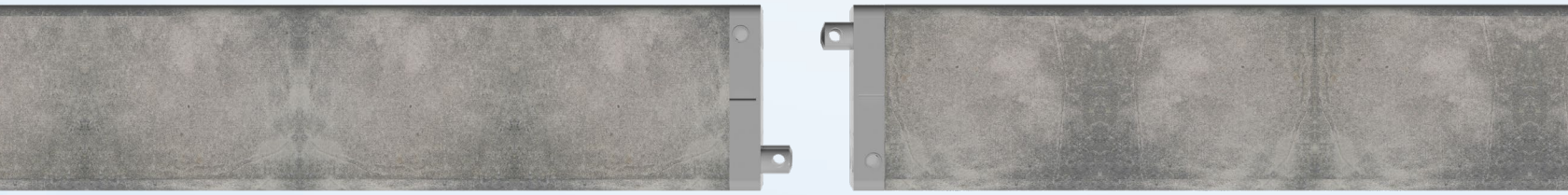

Emeca SPE USA

200 10th Street
Laurel, DE 19956
USA

Tel. 302.875.0760
Fax. 302.875.0761
info@emeca-speusa.com
www.emeca-speusa.com